MOTOR INPUT

3 PH, 60 Hz

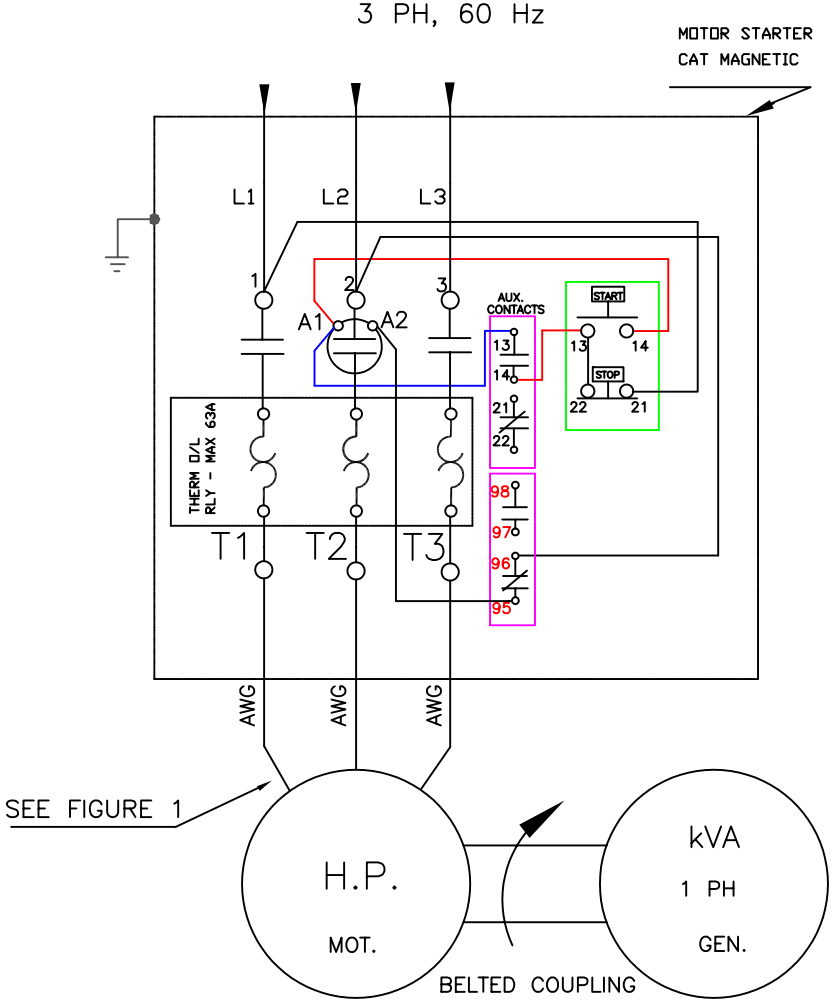

FIGURE 1

MOTOR CONNECTIONS

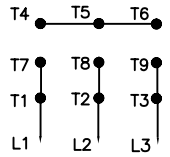

GENERATOR OUTPUT

1 PH, 50 Hz (+−1%), 1500 RPM

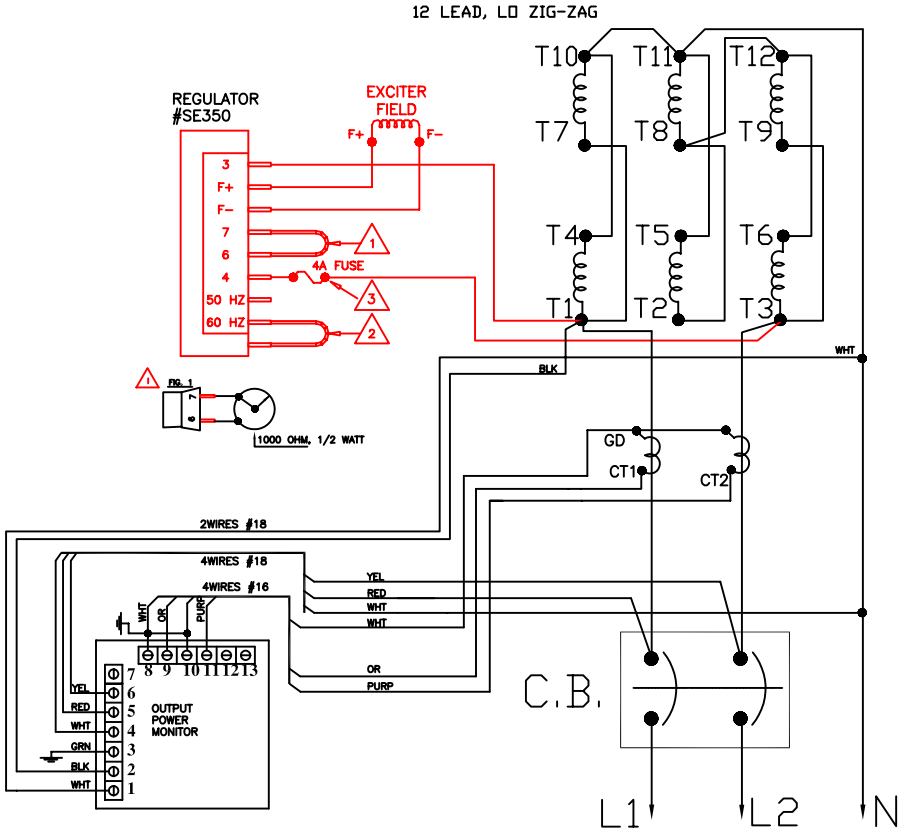

NOTES:

1. IF REMOTE VOLTAGE CONTROL IS REQUIRED, REMOVE JUMPER WIRE ACROSS TERMINALS #6 AND #7, AND INSTALL (SEE FIGURE 1) A 1000 OHM, 1/2 WATT RHEOSTAT.
2. MOVE JUMPER TO CORRESPOND WITH THE GENERATOR OPERATING FREQUENCY 50 HZ OR 60 HZ.
3. FUSE IS INHERENT TO VOLTAGE REGULATOR
4. WIRE INPUT AND OUTPUT PER NATIONAL, LOCAL, AND SITE CODE

REV.	DESCRIPTION	DATE	BY

DATE 5-11-06
DRAWN M.H.
FILE: 25-SAMPLE10.DWG
APP'D.
SCALE NONE

GEORATOR Corporation
9617 Center Street Manassas, VA 20110-5521, USA
Telephone (703)-368-2101 FAX (703) 368-1078

NAME
WIRING DIAGRAM,
INPUT: 3PH, OUTPUT: 1PH, 50/60Hz, LOW ZIG-ZAG

SHEET 1 OF 1
DWG. NO. A 25-SAMPLE10
REV.