MOTOR INPUT

3 PH, 50–60 Hz

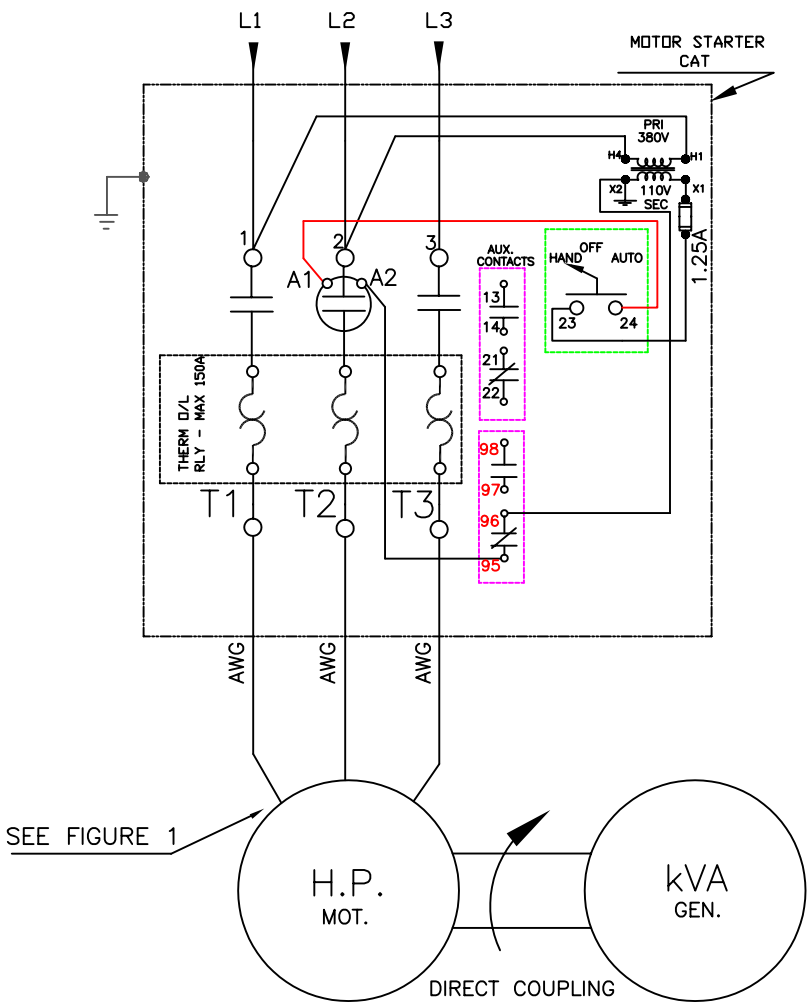

FIGURE 1

MOTOR CONNECTIONS

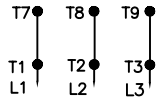

GENERATOR OUTPUT

3 PH, 400 Hz (+0, – 2%), 2000 RPM

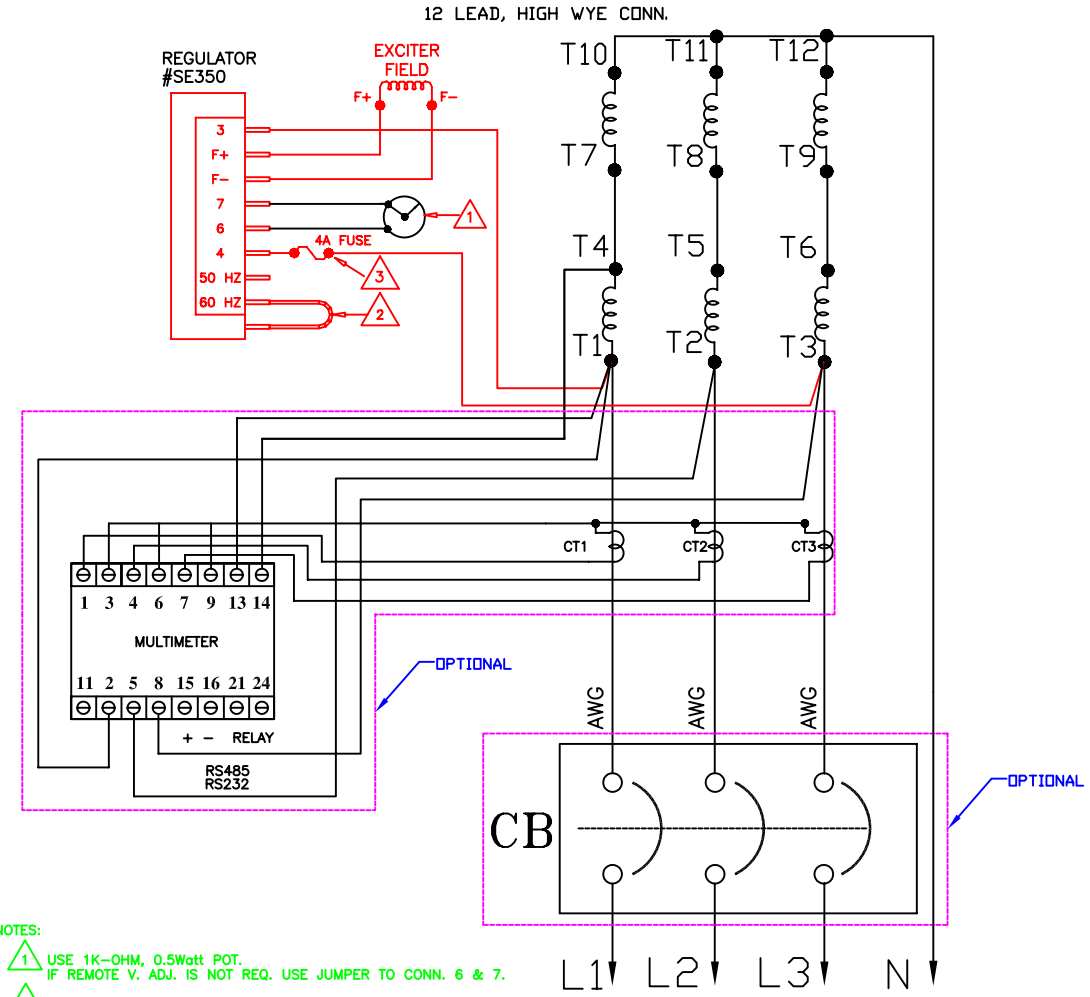

NOTES:

1. USE 1K–OHM, 0.5Watt POT. IF REMOTE V. ADJ. IS NOT REQ. USE JUMPER TO CONN. 6 & 7.
2. MOVE JUMPER TO CORRESPOND WITH THE GEN. FREQ. 50 HZ OR 60 HZ.
3. FUSE IS INHERENT TO VOLTAGE REGULATOR
4. WIRE INPUT & OUTPUT PER CODE.

REV.	DESCRIPTION	DATE	BY

UNSPECIFIED TOLERANCES
FRACTIONAL N/A
DECIMAL
2 PLACE N/A
3 PLACE N/A
ANGULAR N/A

PLOT @: FIT

This drawing and any print thereof is the property of Georator Corporation and is subject to return on request by this company. The information shown is confidential and the recipient by accepting this drawing agrees not to use any information contained thereon in any manner which will be detrimental to Georator Corporation.

UNLESS OTHERWISE SPECIFIED DIMENSIONS ARE IN INCHES.

DO NOT SCALE DRAWING

DATE 5–19–06

DRAWN M.H.

FILE: 25–SAMPLE29.DWG

APP'D.

SCALE NONE

Georator Corporation
9617 Center Street Manassas, VA 22110-5521, USA
Telephone (703)-368-2101 FAX (703) 368-1078

NAME
WIRING DIAGRAM,
50–60/400Hz, 3:3PH, HIGH WYE

MATERIAL

FINISH

SHEET 1 OF 1

DWG. NO. A 25–SAMPLE28

REV.